EVOTECH®
PERFORMANCE

www.evotech-performance.com

Yamaha Tracer 7
Ultimate Addon Sat Nav Mount

Kit Contents

Ⓐ 1 x Pivot Plate
Ⓑ 1 x Main Bracket
Ⓒ 1 x Ultimate Addons Plate
Ⓓ 2 x M8 Caphead Bolt
Ⓔ 2 x Nord Washer
Ⓕ 2 x M5 x 8mm Black Button Head Bolt
Ⓖ 2 x Spacer
Ⓗ 2 x M5 x 12 Caphead Bolt

Installation Instructions 1

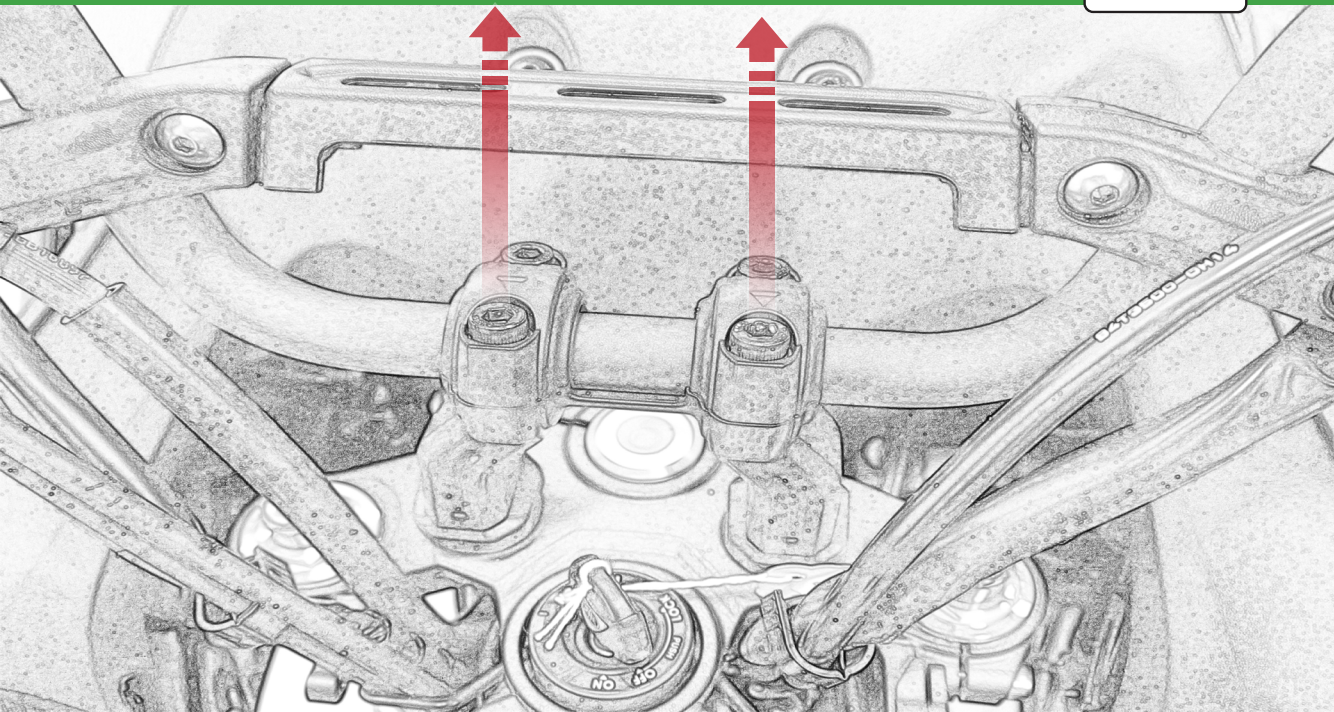

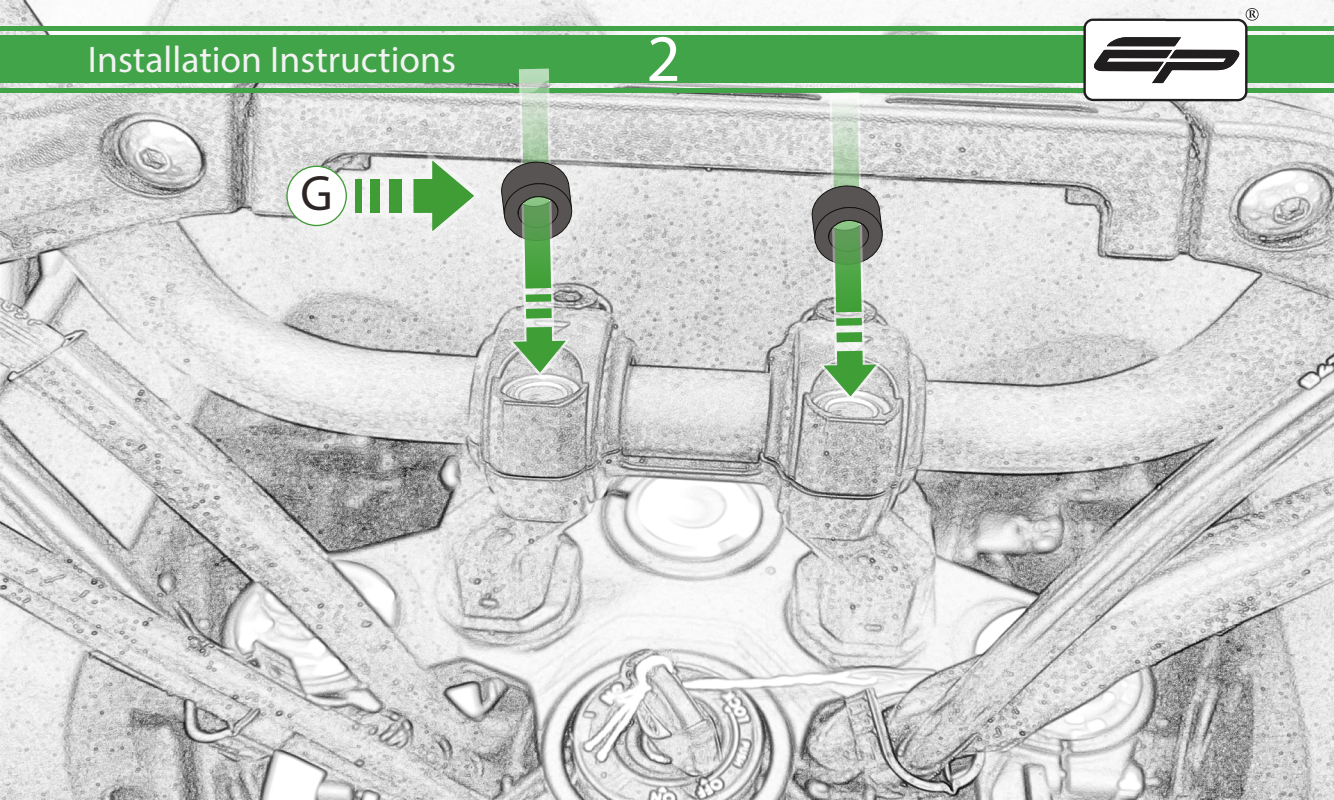
G

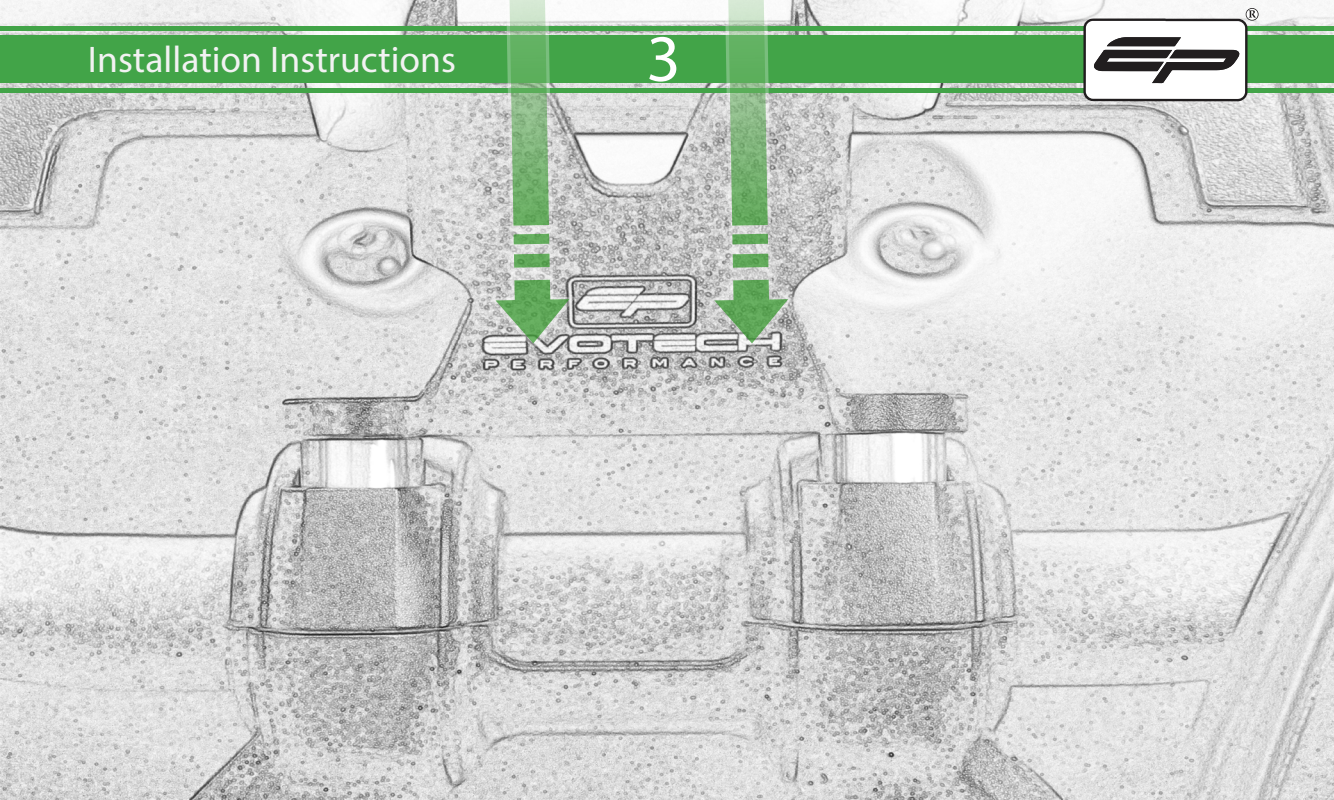
EVOTECH
PERFORMANCE

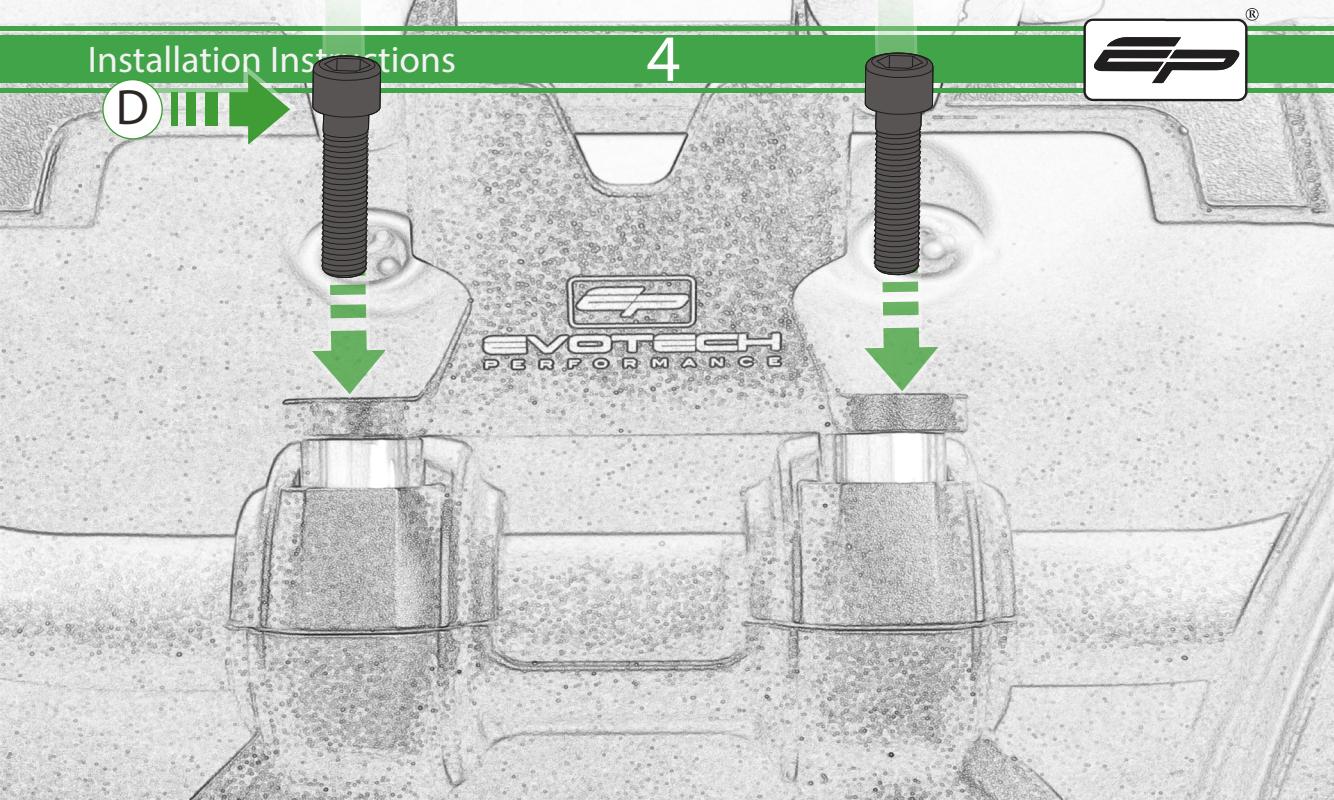
D
EVOTECH
PERFORMANCE

A
C

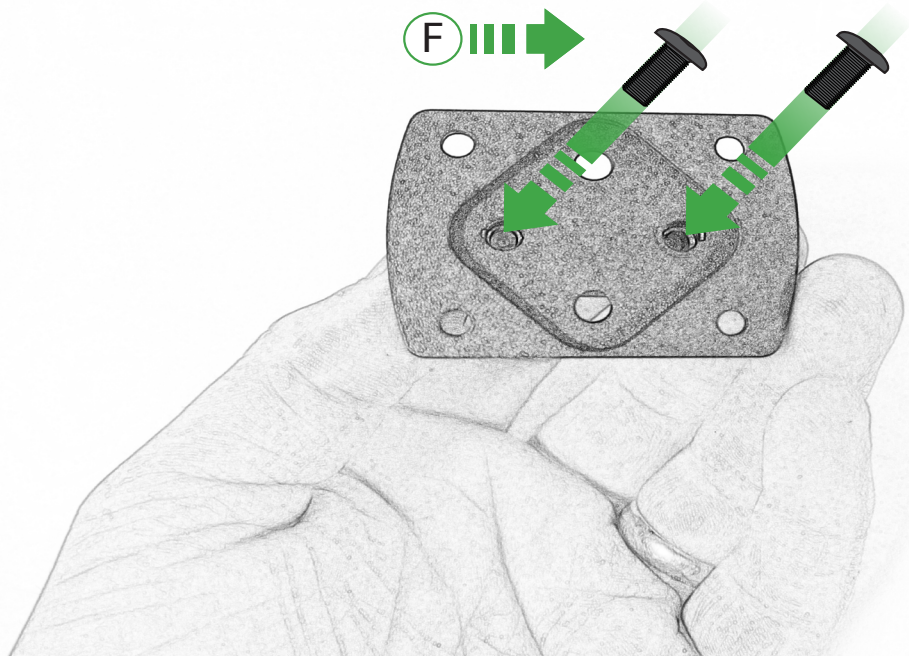
F

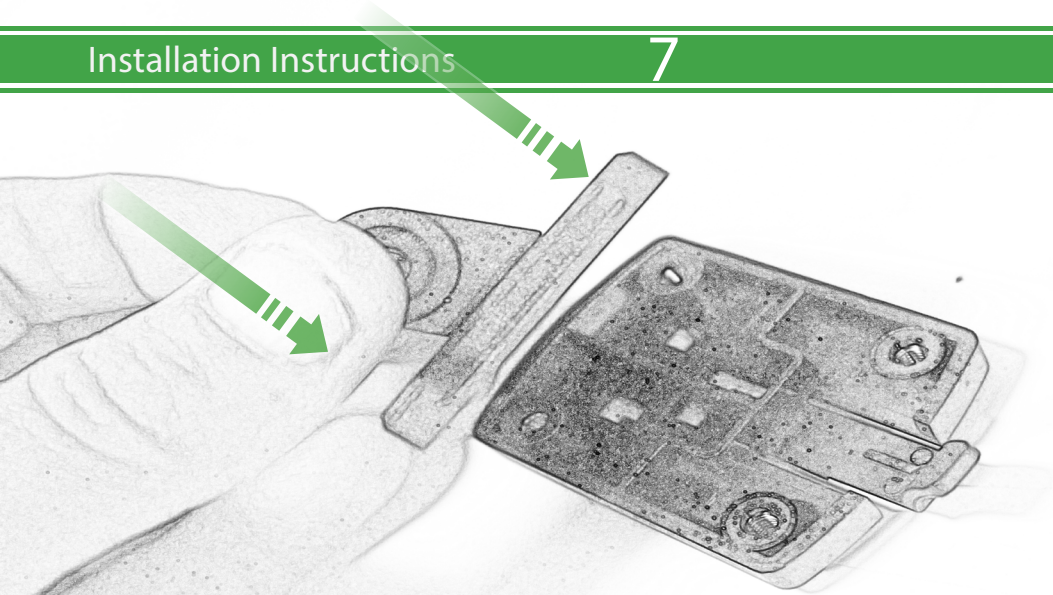

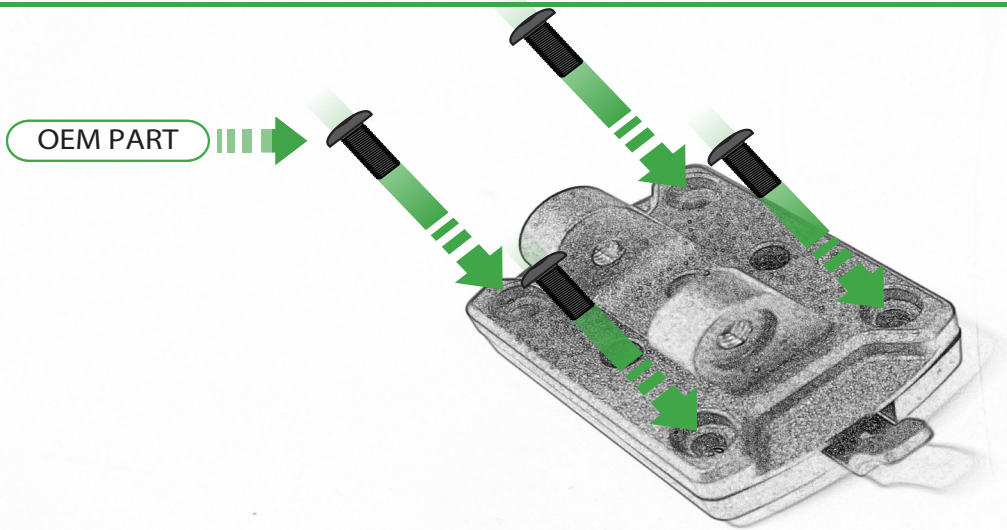
OEM PART

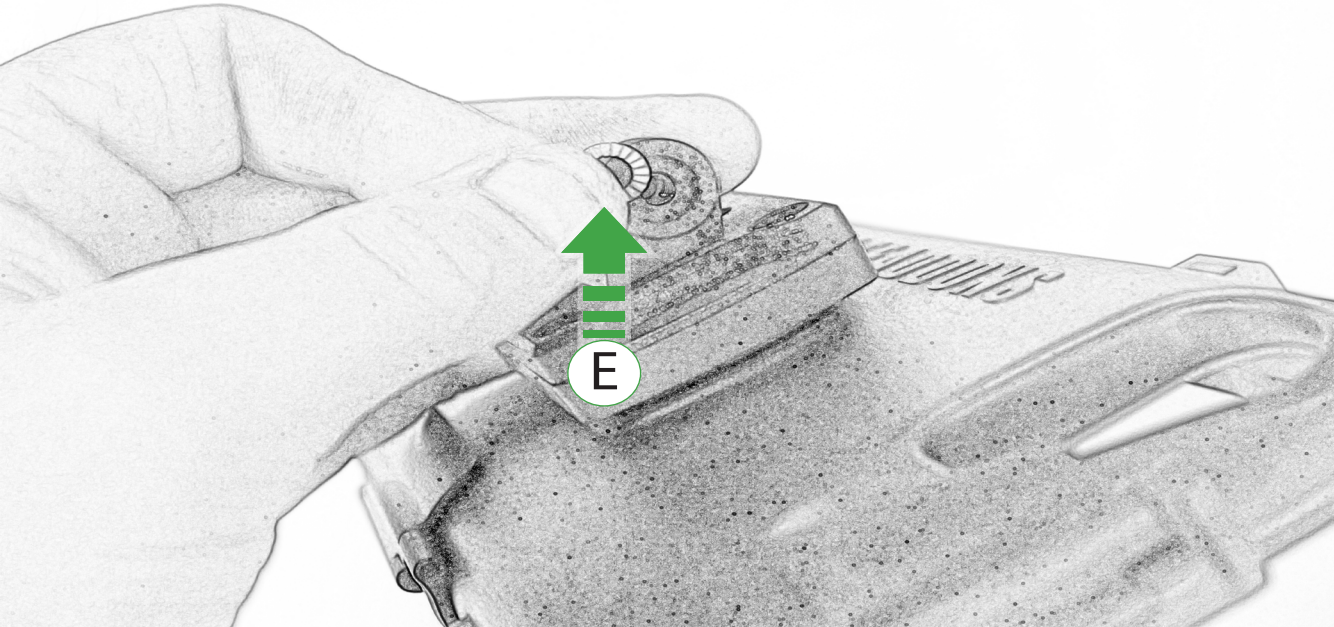
E

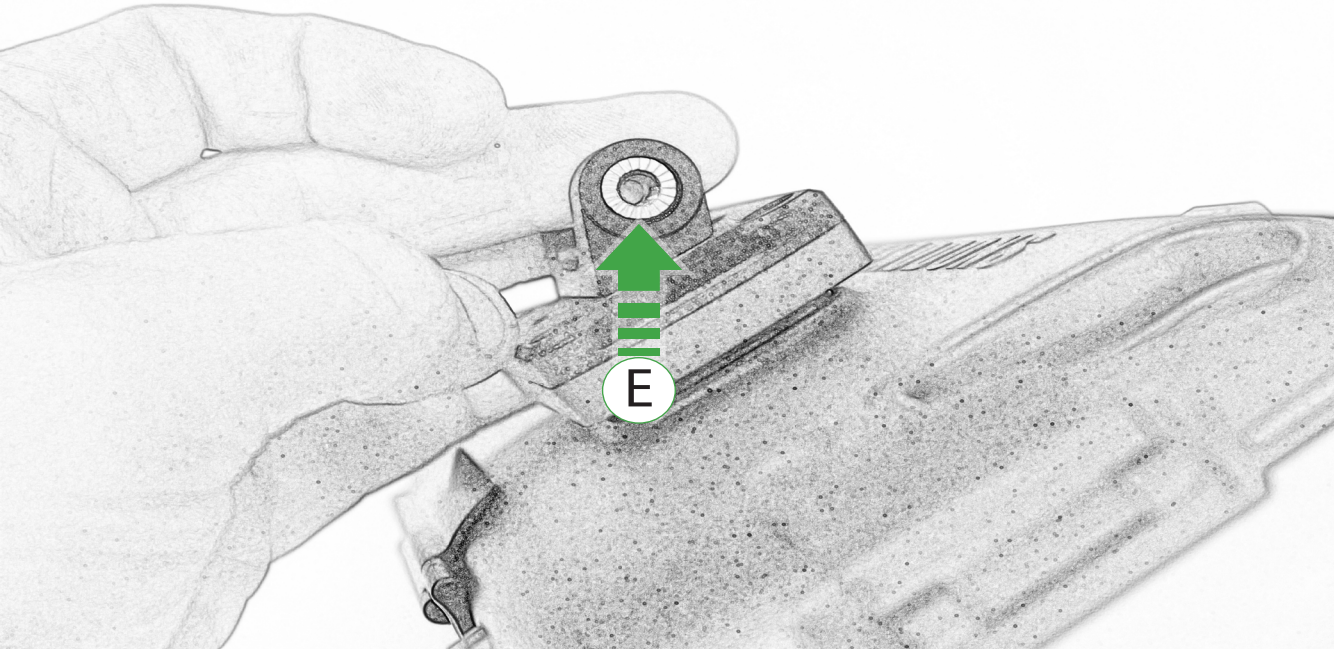
E

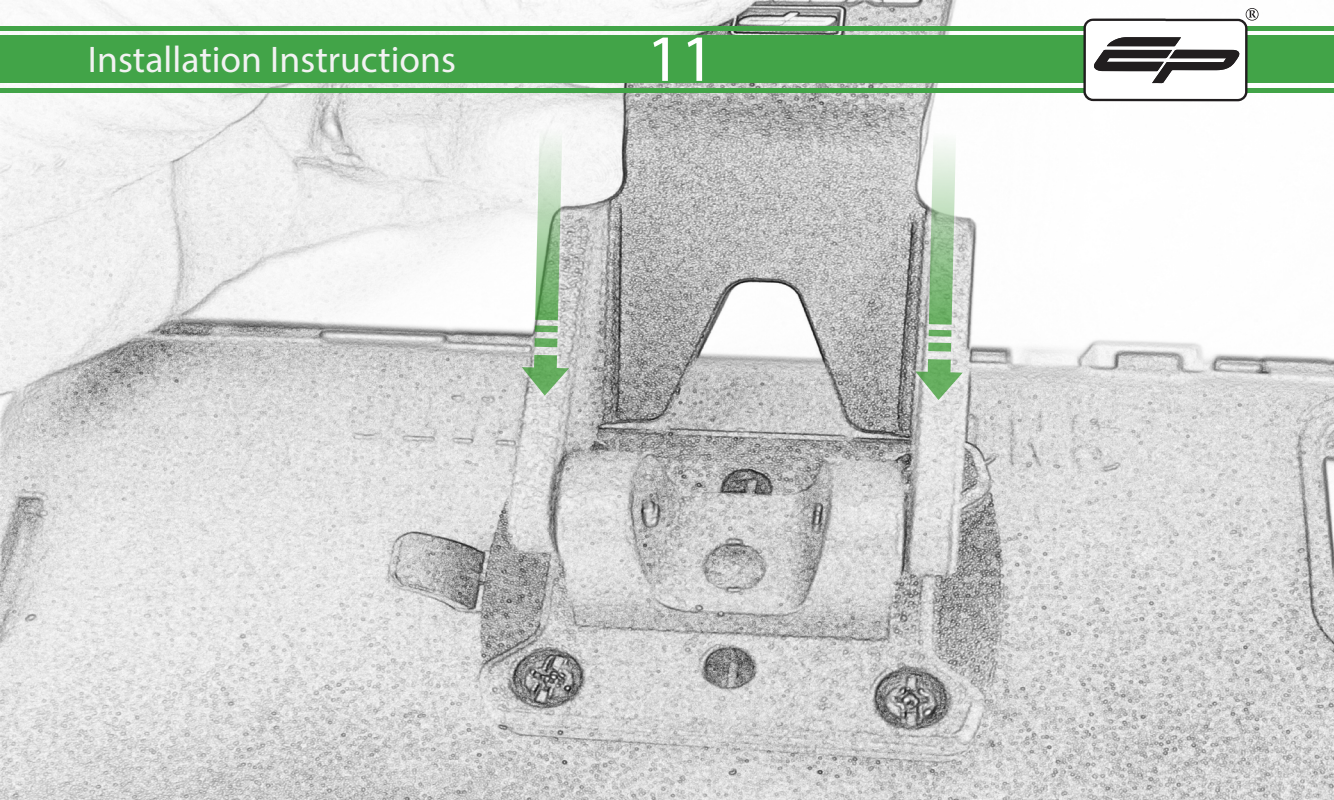

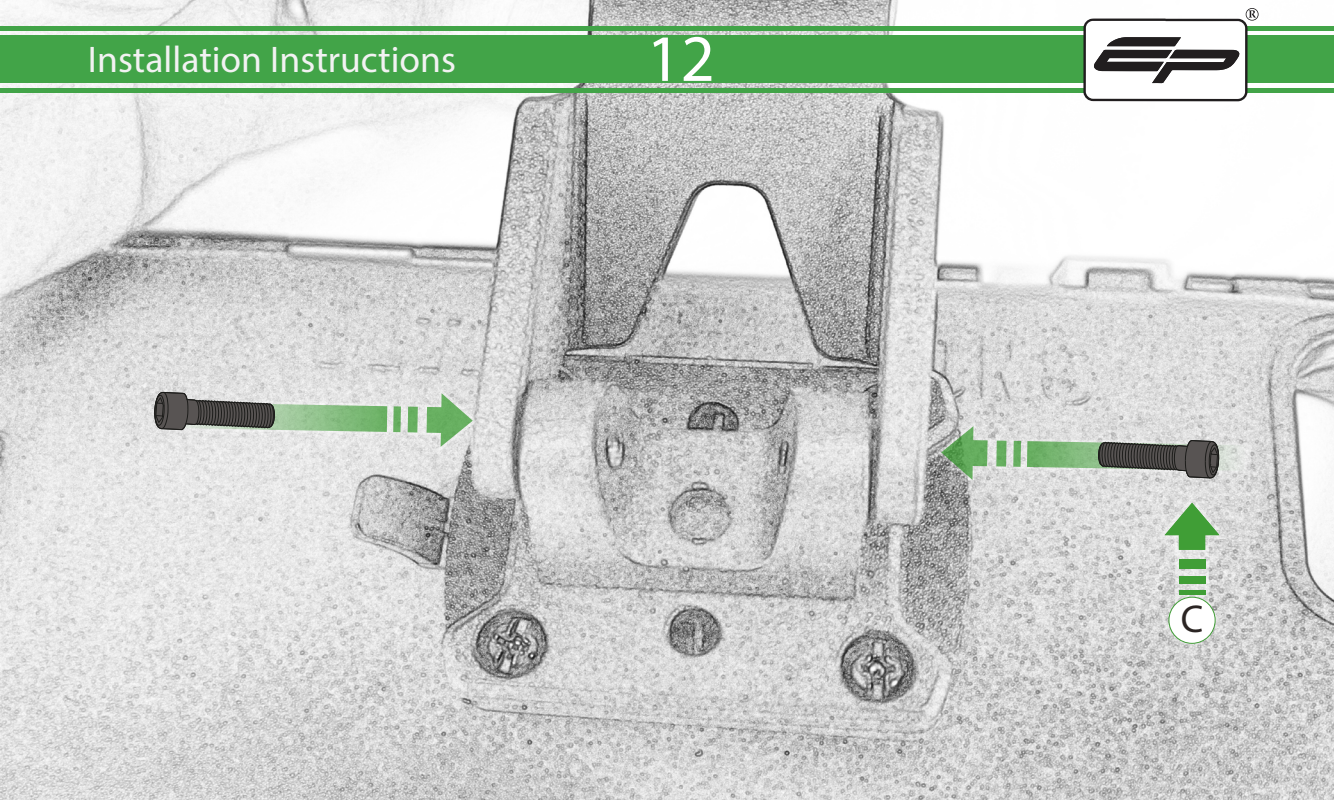
C

ESSENTIAL CHECKS

It is recommended that periodic inspections are made to ensure that all bolts are tightend to the specified torque settings.

Should the bike be involved in an accident a thorough inspection should be made and any components that have taken an impact, no matter how small, be replaced

www.evotech-performance.com